© Copyright 2011 Appian Consulting Engineers, P.A. These drawings have been prepared as instruments of service for a particular site or building improvement and remains the property of the Engineer for use under his supervision. No reproduction or other use is allowed without his permission.

P107 DECK CONSTRUCTION SCHEMATIC

NOT TO SCALE — Details Developed By APPIAN Consulting Engineers — DATE: 9-30-15

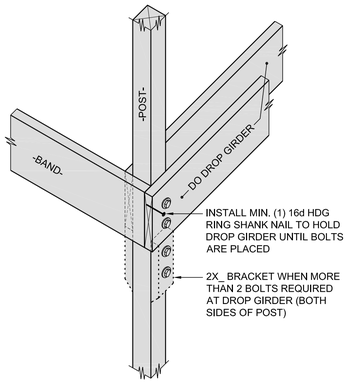

1 POST & DROP GIRDERS

NOT TO SCALE

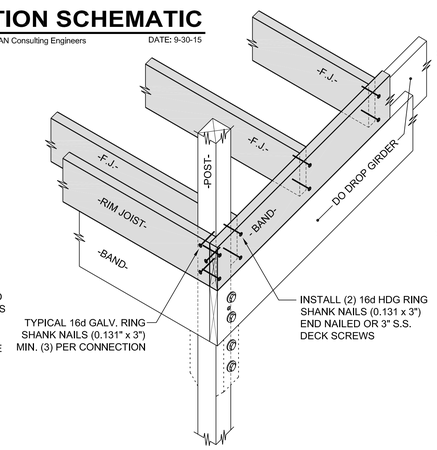

2 FLOOR JOIST SYSTEM

NOT TO SCALE

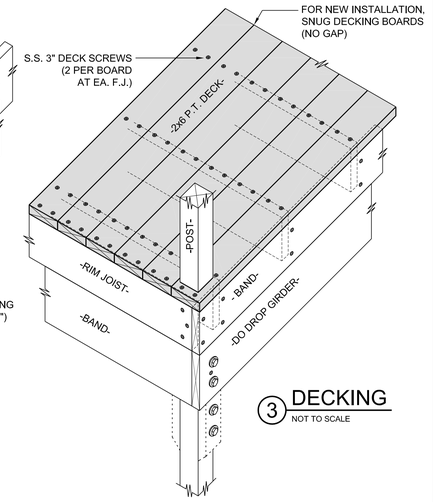

3 DECKING

NOT TO SCALE

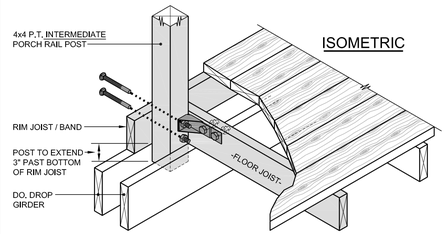

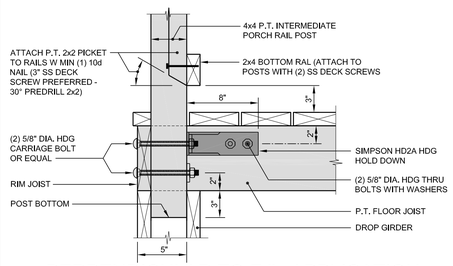

PERPENDICULAR TO FJ's APPLICATION

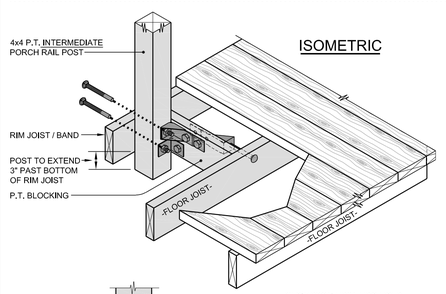

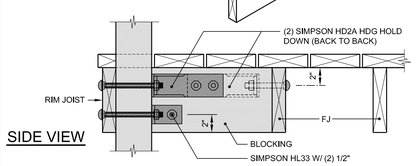

SIDE VIEW

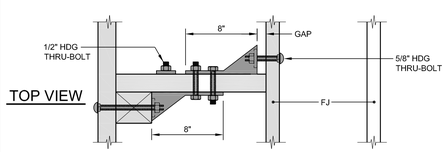

TOP VIEW

PARALLEL TO FJ's APPLICATION

P106 INTERMEDIATE POST CONNECTION AT DECK

SCALE: 1 1/2"=1'-0" (PARALLEL TO FJ's) — DATE: 10-20-15

Details Developed By APPIAN Consulting Engineers

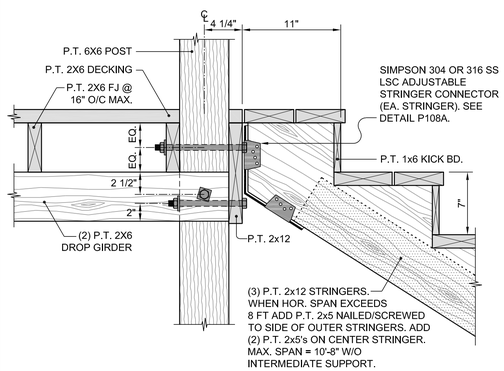

P109 SECTION at LOWER STAIR ATTACHMENT

SCALE: 1 1/2" = 1'-0" — DATE: 11-28-16

Details Developed By APPIAN Consulting Engineers

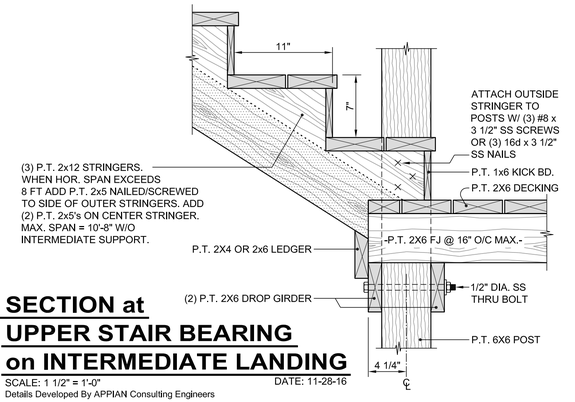

P110 SECTION at UPPER STAIR BEARING on INTERMEDIATE LANDING

SCALE: 1 1/2" = 1'-0" — DATE: 11-28-16

Details Developed By APPIAN Consulting Engineers

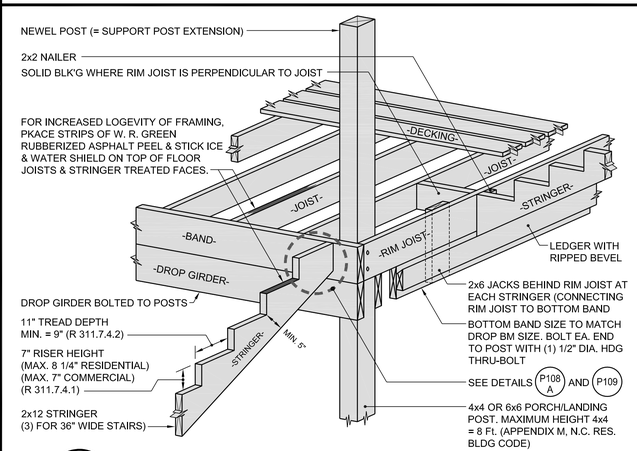

P111 ALTERNATE UPPER STAIR ATTACHMENT (WHEN APPROVED BY ENGINEER)

NOT TO SCALE — Details Developed By APPIAN Consulting Engineers — DATE: 12-15-14

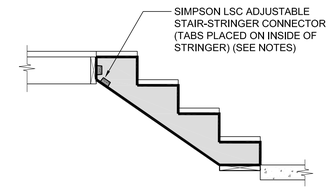

STRINGERS/ STAIRS SHOULD BE CONSTRUCTED SO THE FIRST STEP IS AT THE SAME LEVEL OF THE FLOOR PLATFORM WHICH GIVES THE STRINGERS FULL BEARING. IF THIS LAYOUT CANNOT BE ACCOMPLISHED, PROPER BEARING FOR THE STRINGERS SHOULD BE PROVIDED. SEE DETAIL B

COASTAL APPLICATIONS: USE LSC SS W/ STAINLESS STEEL FASTENERS (SIMPSON DWP 316 STAINLESS STEEL SCREWS, SD #9 x 1 1/2" LONG OR 10d X 1 1/2" LONG SS NAILS.)

INLAND APPLICATIONS: USE LSCZ W/ SD #9 x 1 1/2" LONG SCREWS OR 10d x 1 1/2" HDG NAILS

A STAIRS FLUSH AT TOP - PREFERRED METHOD

NOT TO SCALE

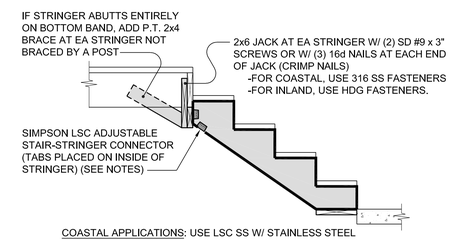

COASTAL APPLICATIONS: USE LSC SS W/ STAINLESS STEEL FASTENERS (SIMPSON DWP 316 STAINLESS STEEL SCREWS, SD #9 x 1 1/2" LONG OR 10d X 1 1/2" LONG SS NAILS.)

INLAND APPLICATIONS: USE LSCZ W/ SD #9 x 1 1/2" LONG SCREWS OR 10d x 1 1/2" HDG NAILS

B STAIRS OFFSET AT TOP - - WHEN APPROVED BY ENGINEER

NOT TO SCALE

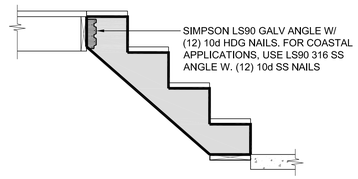

C ATTACHMENT OF STAIR STRINGER TO BEAM OR HEADER - RETROFIT APPLICATIONS ONLY

NOT TO SCALE

P108 STAIR CONNECTION AT DECK

NOT TO SCALE — DATE: 2-26-16

Details Developed By APPIAN Consulting Engineers

HOR. SCALE:	AS NOTED	DATE:	NOVEMBER, 2022	DESIGN:	Bobby Joyner
VER. SCALE:	N/A	DRAWN BY:	-	CHKD:	-

REVISIONS

NO.	DATE:	DESCRIPTION:	BY:	CAD:
1	-	-	-	-

Appian

CONSULTING ENGINEERS, P.A.
CIVIL, MUNICIPAL & STRUCTURAL ENGINEERS
COMPREHENSIVE ENVIRONMENTAL SERVICES
BLN = C0562

154 Roundabout Ct.
Rocky Mount, N.C. 27804
Phone: (252) 972-7703
Fax: (252) 972-7638

www.appianengineers.com
admin@appianengineers.com

Final Drawings Review Purposes ONLY

NORTH CAROLINA PROFESSIONAL ENGINEER SEAL 8421 BOBBY L. JOYNER 03/06/2023

PORCH DETAILS For Hyde County N.C. Flood Mitigation Assistance Grant 5161-004

22-089

D-0000

P-2